2.4 GHz Cascode Common-Source LNA Design

Object

Design, model, and verify a 2.4 GHz CMOS Low-Noise Amplifier using a common-source cascode topology.
The work focuses on RF gain, input matching, noise performance, and the influence of device parasitics at GHz frequencies.

LNA Structure

Cascode Common-Source topology consisting of:

- Input matching network (Ls, Lg, Cgs, Cpad resonance)
- Common-source input transistor (M1)
- Cascode transistor (M2)
- Load inductor (Ld)
- Bias network

The cascode structure improves:

- reverse isolation
- gain
- stability at high frequency.

Circuit Components

Input matching network
RF transistor pair (CS + Cascode)
Load inductor
Biasing circuit

System Overview

The amplifier operates at 2.4 GHz, a typical ISM band used in wireless communication systems.

The design goal is to:

- achieve sufficient gain for the RF front-end
- maintain good input matching to a 50 Ω source
- minimize noise contribution of the first stage

The cascode configuration reduces the Miller effect and improves high-frequency performance.

Specification

Specification	Desired value
Operating frequency	2.4 GHz
Voltage gain	>15 dB
Reflection coefficient(S11)	< −15 dB
Noise figure	< 2 dB
Supply voltage	1.8 V

Design Methodology

Define RF specifications for the target frequency band.

Select transistor size to obtain sufficient transconductance for RF gain.

Design the input matching network so the amplifier presents approximately 50 Ω input impedance.

Use inductive load and cascode configuration to improve gain and stability.

Simulate RF characteristics using S-parameter analysis.

Verify noise performance and adjust bias current to optimize the gain-noise trade-off.

Simulation Results

Schematic design

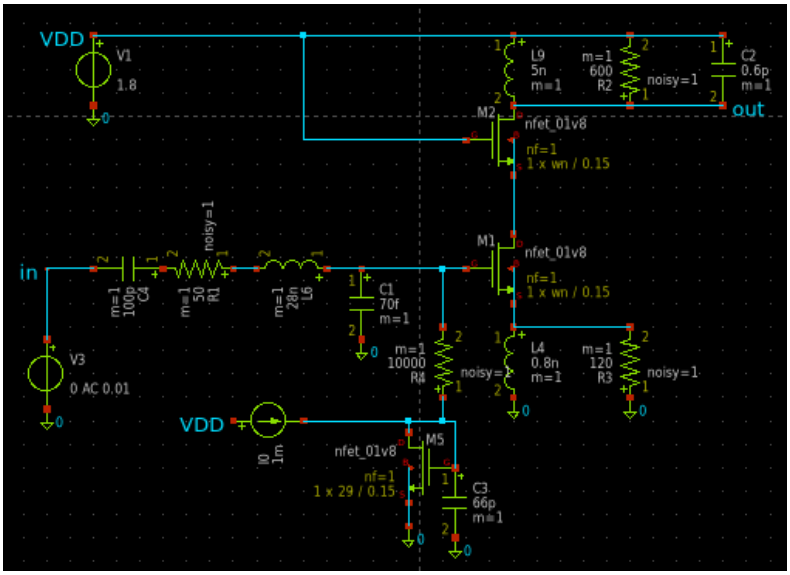

Voltage gain

The required gain(15dB) is achieved from 1.99 GHz to 3.27 GHz.

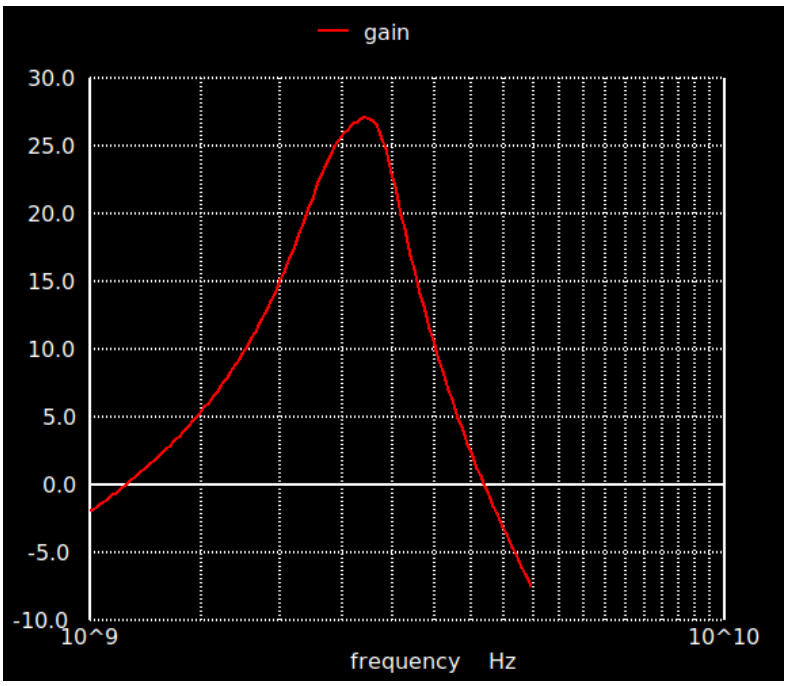

Reflection coefficient

Reflection coefficient is evaluated at the operating frequency to verify how well the LNA match the earlier stage (typically is antenna). The required reflection coefficient (lower than -15 dB) is in range of 2.31 GHz to 2.51 GHz.

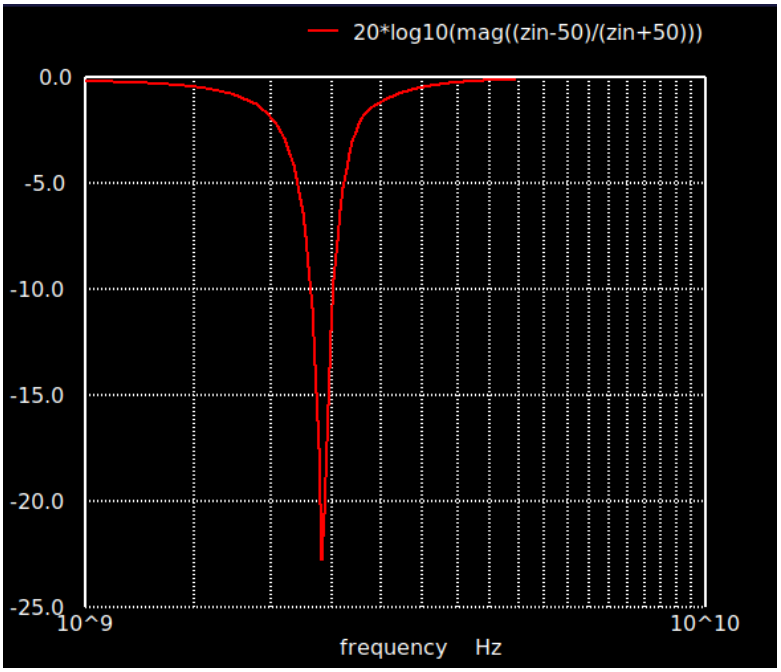

Noise analysis

Noise figure is evaluated at the operating frequency to verify that the first stage dominates receiver noise performance. The required noise figure (lower than 2 dB) is in range of 1.93 GHz to 2.6 GHz.

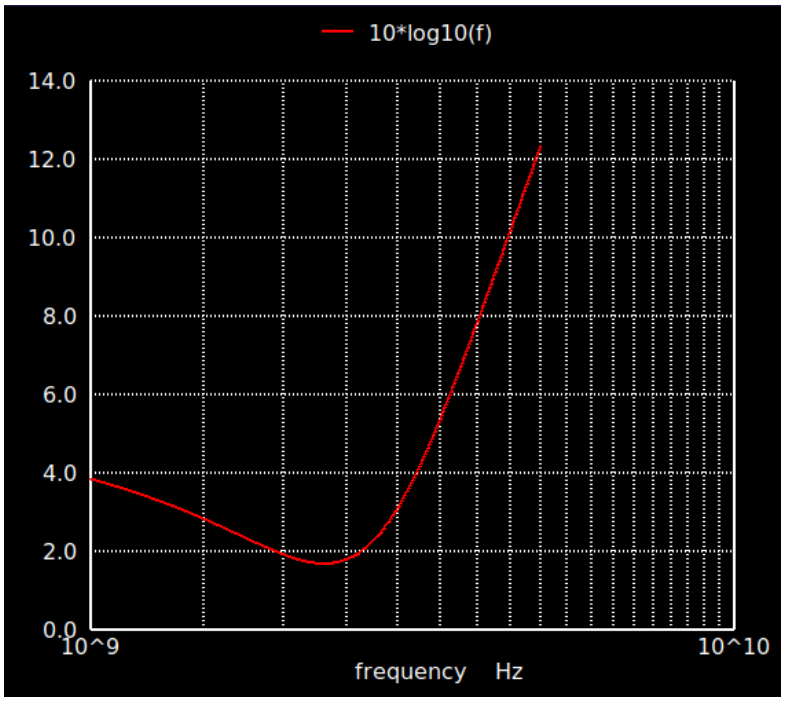

Transient verification

Transient simulation confirms amplifier stability under RF excitation (at 2.4 GHz). The red signal is input, the other is output.

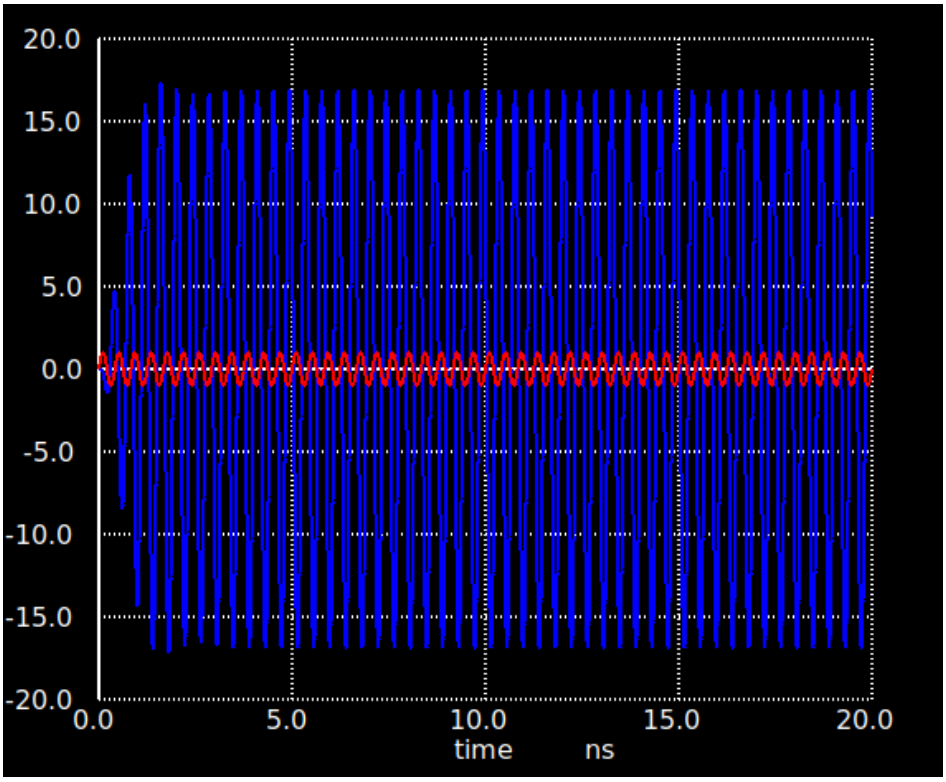

Design Trade-offs

Gain vs Power Consumption: Higher bias current increases gain but raises power consumption.
Noise vs Transistor Size: Larger devices reduce noise but increase parasitic capacitance.
Matching vs Bandwidth: Precise resonance improves matching but narrows bandwidth.
Cascode Benefit: Improves gain and isolation but slightly increases voltage headroom requirement.

Limitations and Practical Considerations

While the schematic-level simulations meet all specifications, several practical factors must be considered for successful chip implementation.

1. Ideal Passive Components

The simulation uses ideal inductors and capacitors. In practice, integrated inductors (Lg, Ls, Ld) have a finite quality factor (Q) and parasitic resistance. This resistance generates thermal noise, which increases the overall noise figure and reduces gain. A post-layout simulation with electromagnetic (EM) models is necessary for accurate performance prediction.

2. Input Matching Headroom for Parasitics

The simulated S11 achieves -15 dB at 2.4 GHz, providing a 5 dB margin over the -10 dB requirement. This headroom accounts for performance degradation caused by bond pads and interconnection parasitics in the physical layout.
This ensures the fabricated chip still meets the specification.

3. Pad Capacitance

The input pad capacitance (C1) is explicitly included in the matching network design. Without this consideration, the bonding pad would add extra capacitance at the input node, detuning the resonance and degrading both matching and gain.

4. Noise Contribution of Inductor Resistance

The series resistance of gate and source inductors (Lg and Ls) is a direct source of thermal noise. In this design, its impact is minimized by assuming high-Q inductors. A lower Q would directly worsen the noise figure.

Skills Demonstrated

RF circuit design and analysis.

Understanding of microwave transistor behavior.

Input impedance matching techniques.

Noise analysis in RF front-end circuits.

Simulation-driven design methodology.

Tools Used

Ngspice --- circuit simulation and RF analysis.

Xschem --- schematic editor.